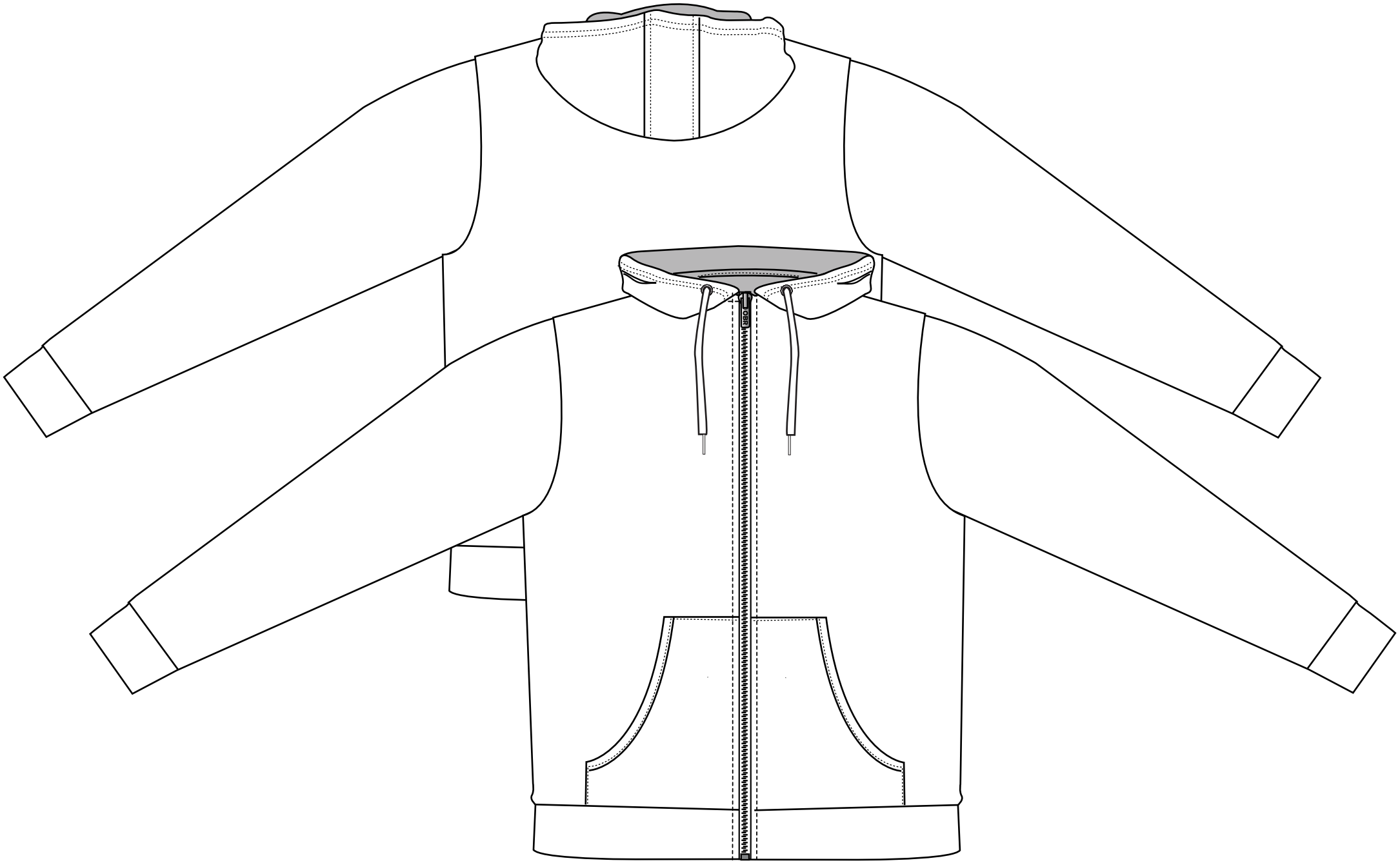

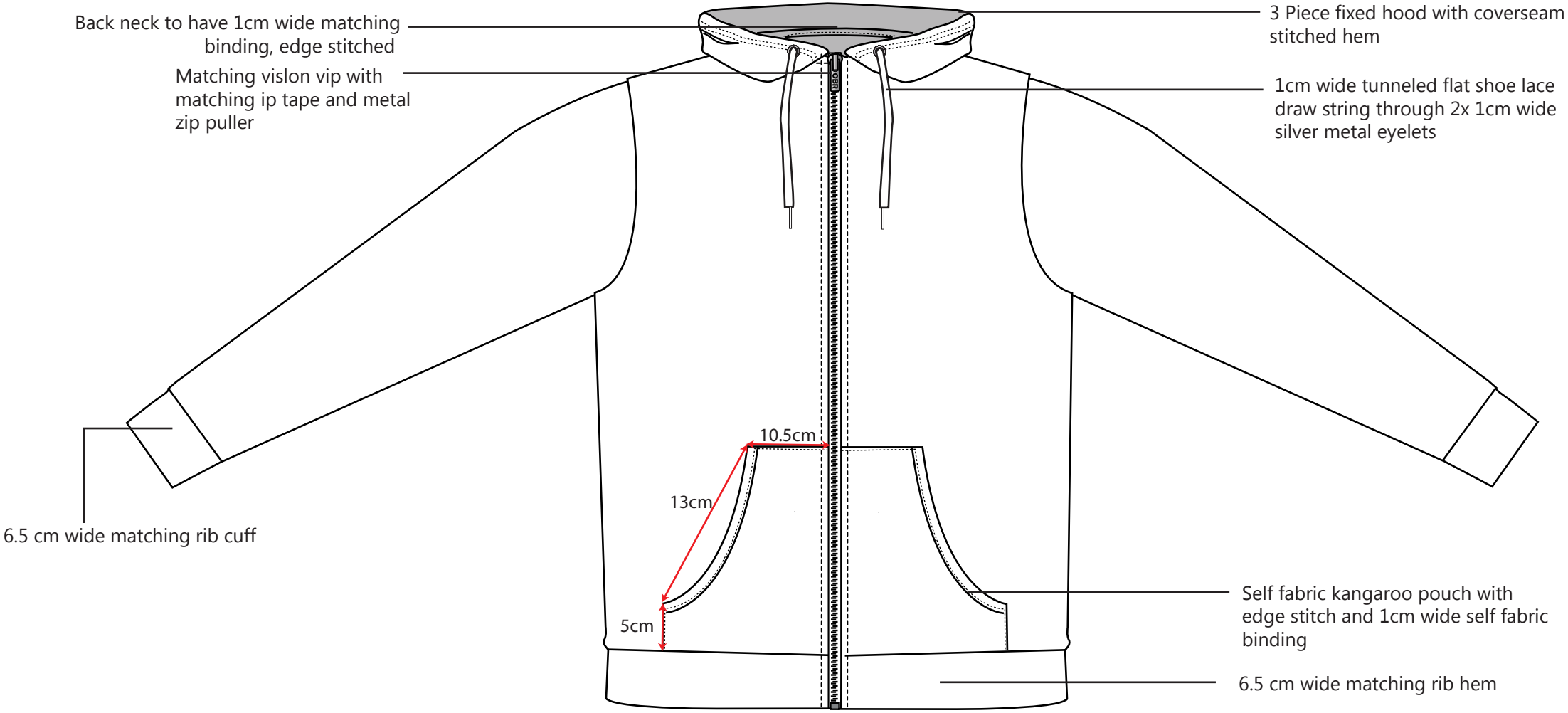
Back neck to have 1cm wide matching binding, edge stitched
Matching vislon vip with matching ip tape and metal zip puller
3 Piece fixed hood with coverseam stitched hem
1cm wide tunneled flat shoe lace draw string through 2x 1cm wide silver metal eyelets
10.5cm
13cm
5cm
6.5 cm wide matching rib cuff
Self fabric kangaroo pouch with edge stitch and 1cm wide self fabric binding
6.5 cm wide matching rib hem

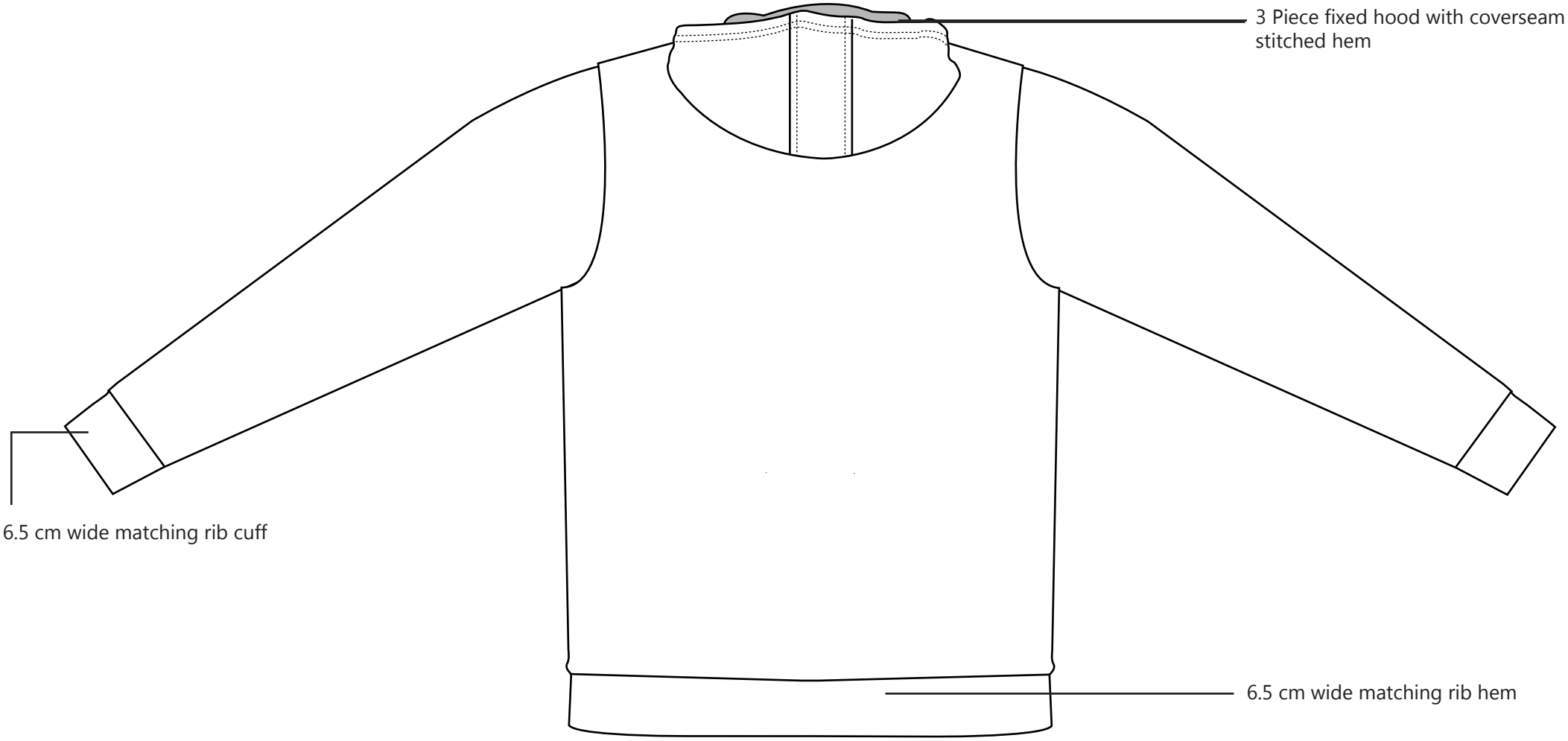
3 Piece fixed hood with coverseam stitched hem
6.5 cm wide matching rib cuff
6.5 cm wide matching rib hem

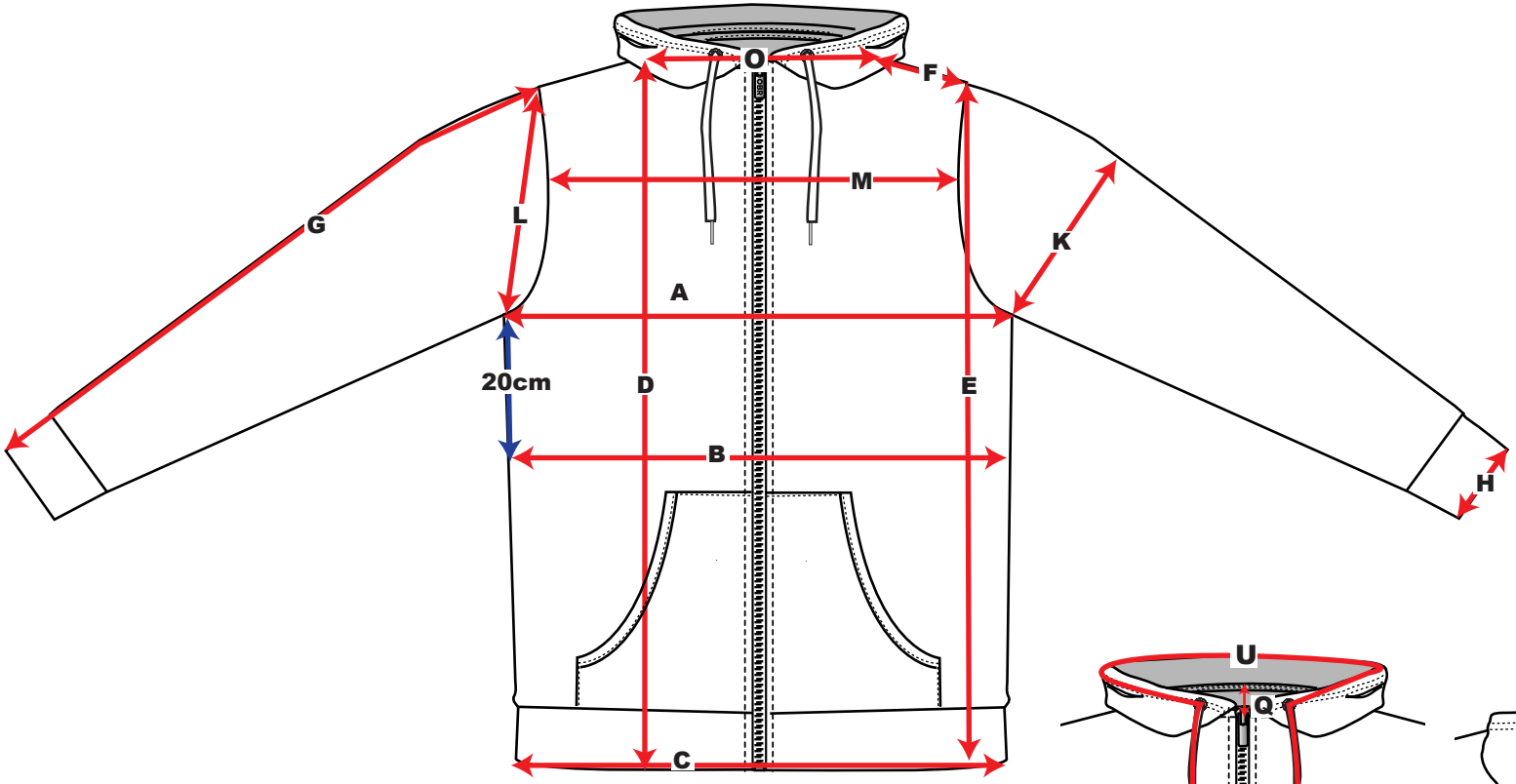
O
F
G
L
M
K
A
20cm
D
E
B
H
C

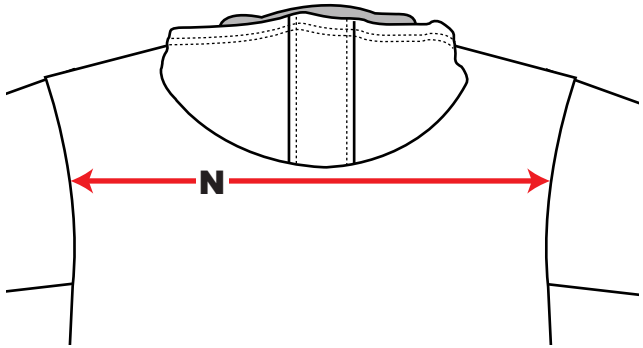
N

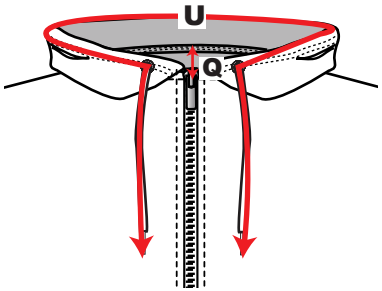
U
Q

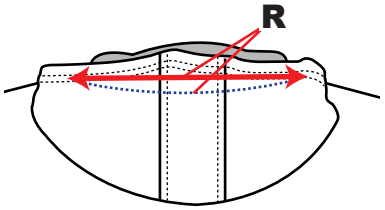
R

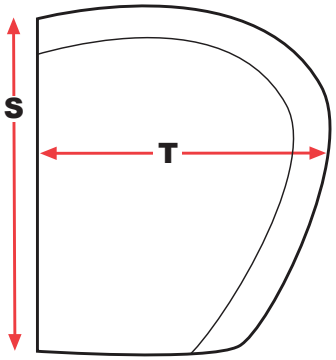
S
T

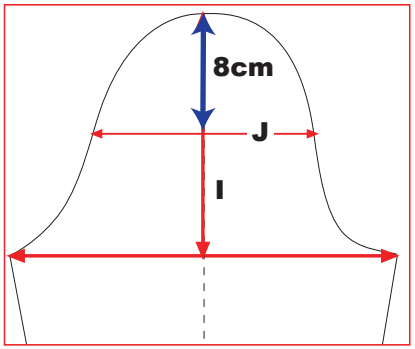
8cm
J
I