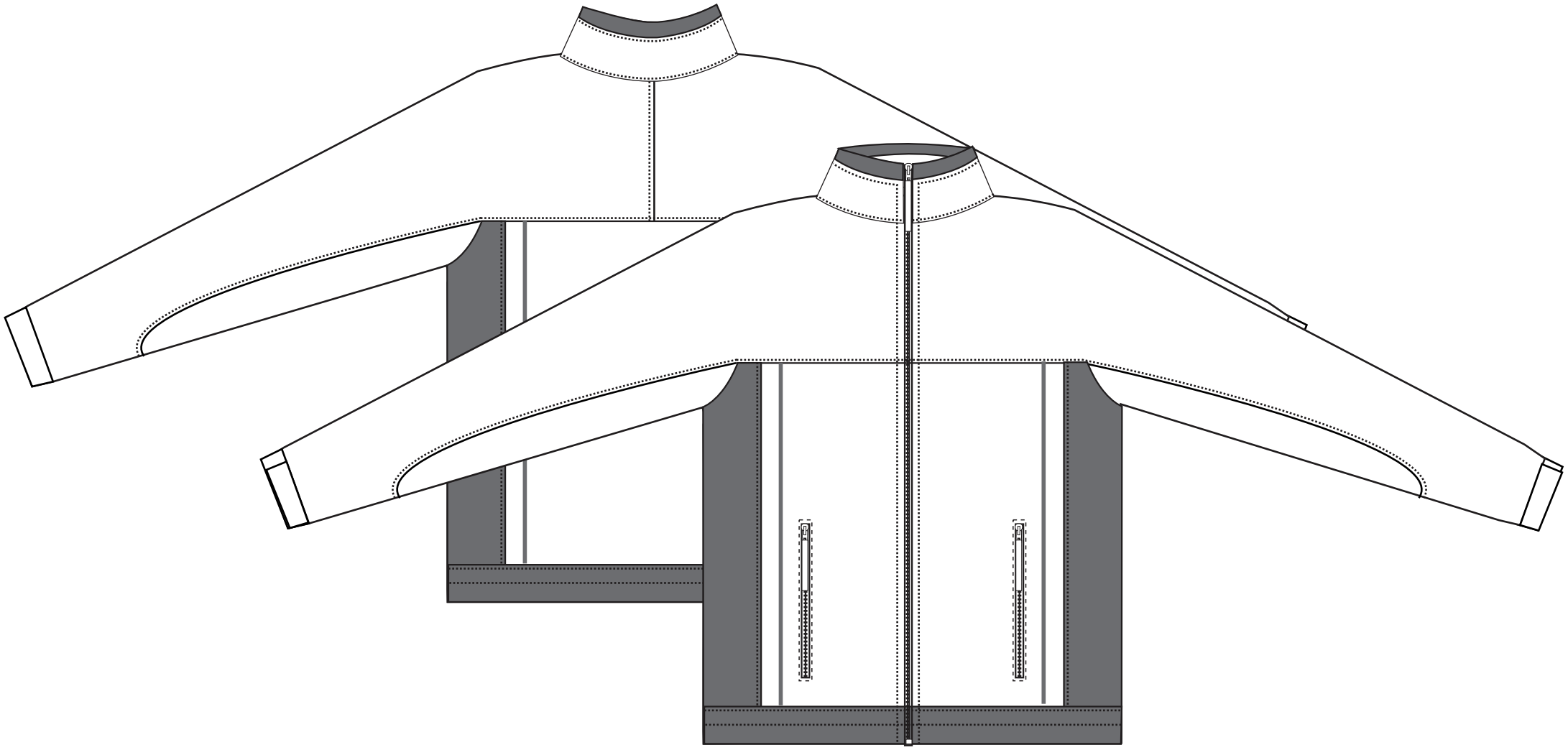

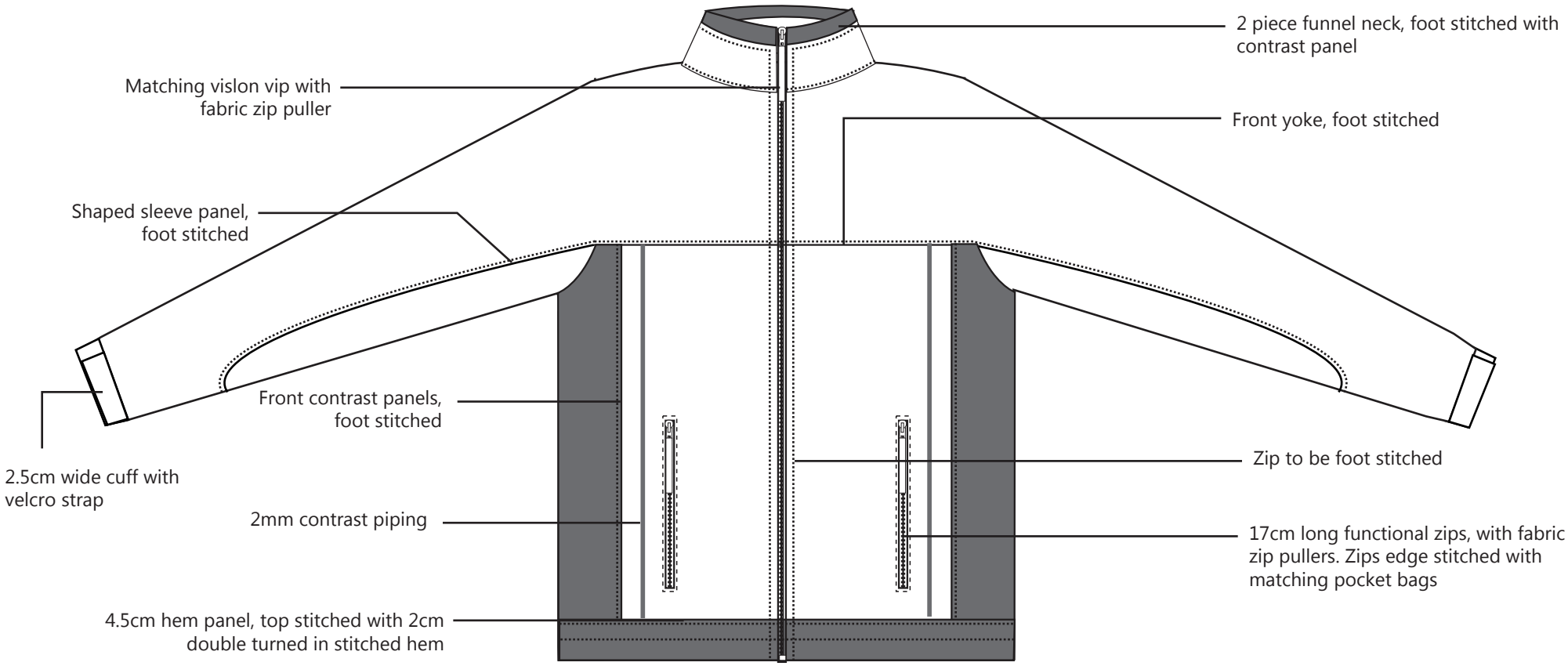
2 piece funnel neck, foot stitched with contrast panel
Matching vislon vip with fabric zip puller
Front yoke, foot stitched
Shaped sleeve panel, foot stitched
Front contrast panels, foot stitched
2.5cm wide cuff with velcro strap
Zip to be foot stitched
2mm contrast piping
17cm long functional zips, with fabric zip pullers. Zips edge stitched with matching pocket bags
4.5cm hem panel, top stitched with 2cm double turned in stitched hem

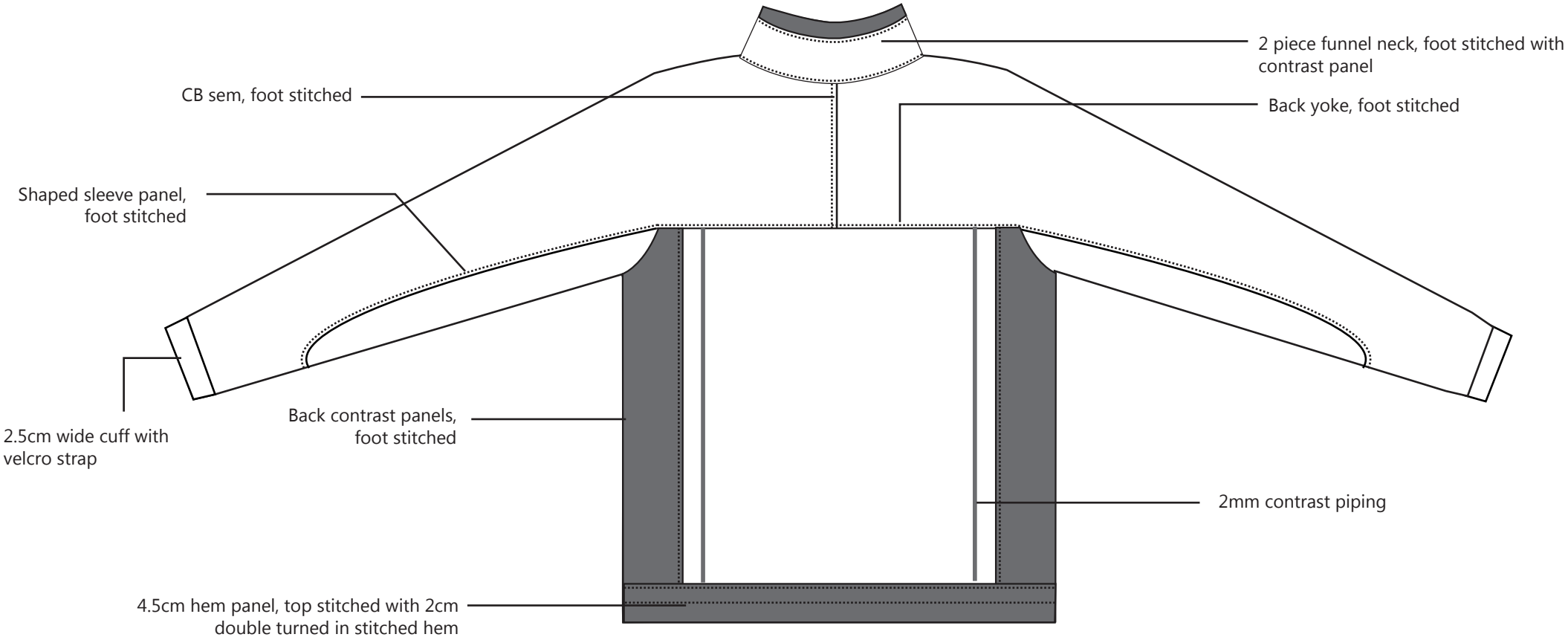
2 piece funnel neck, foot stitched with contrast panel
CB sem, foot stitched
Back yoke, foot stitched
Shaped sleeve panel, foot stitched
2.5cm wide cuff with velcro strap
Back contrast panels, foot stitched
2mm contrast piping
4.5cm hem panel, top stitched with 2cm double turned in stitched hem

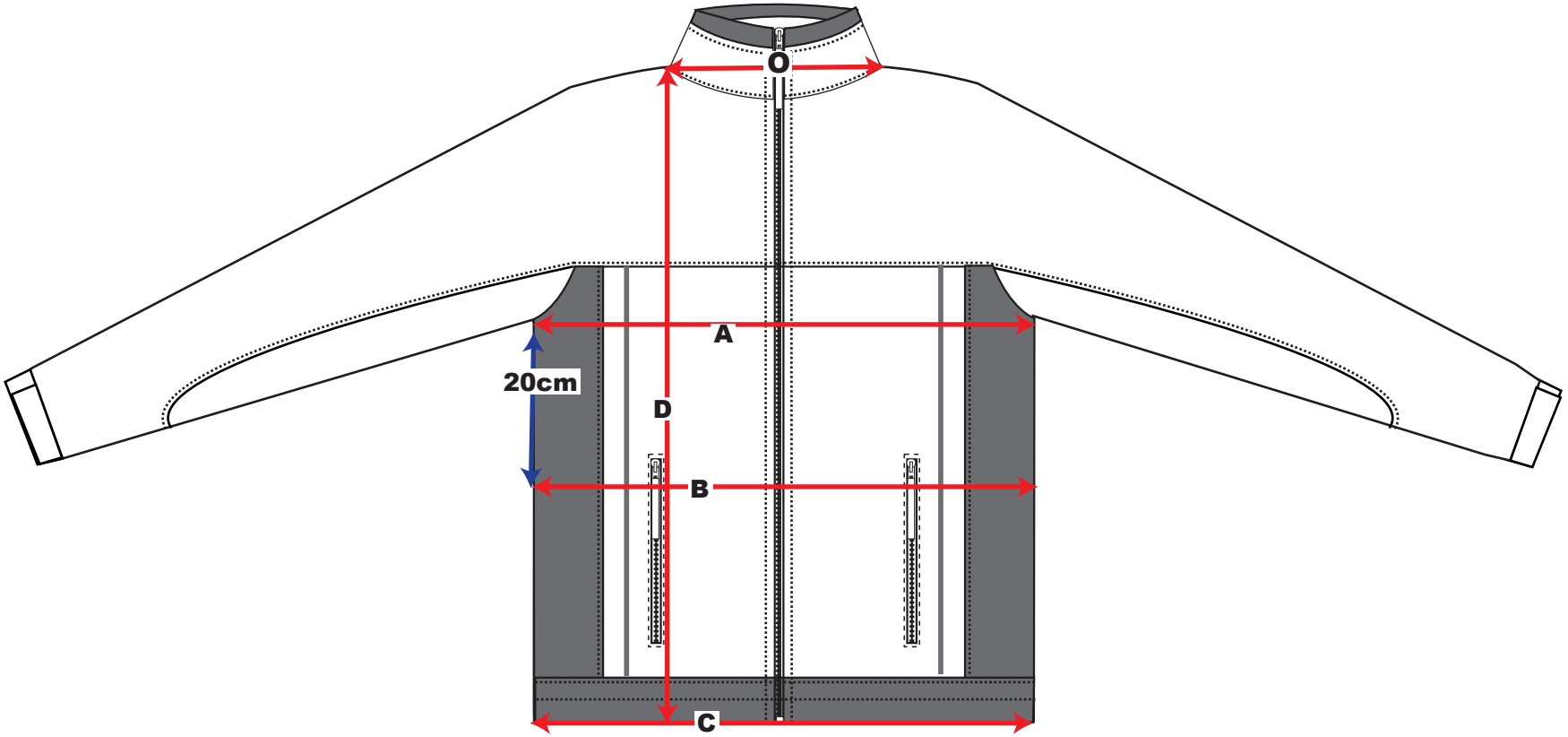
O
A
20cm
D
B
C