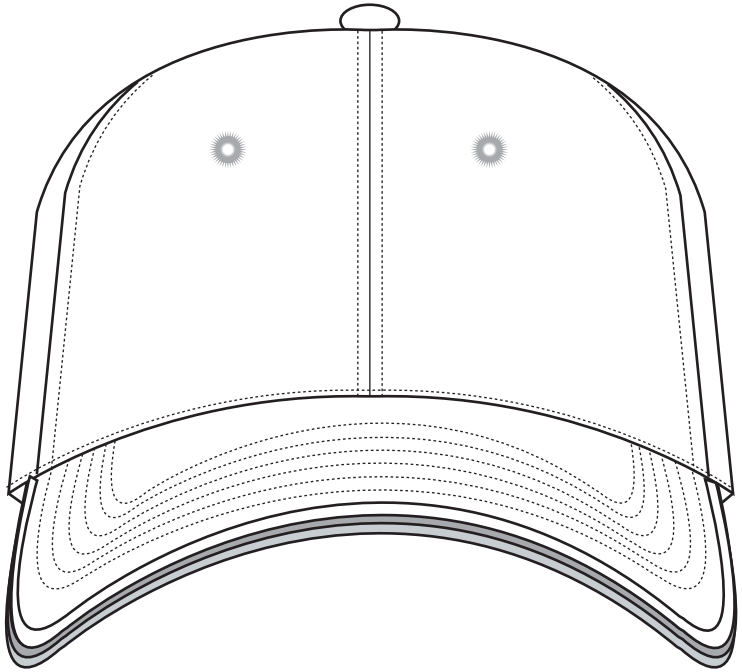

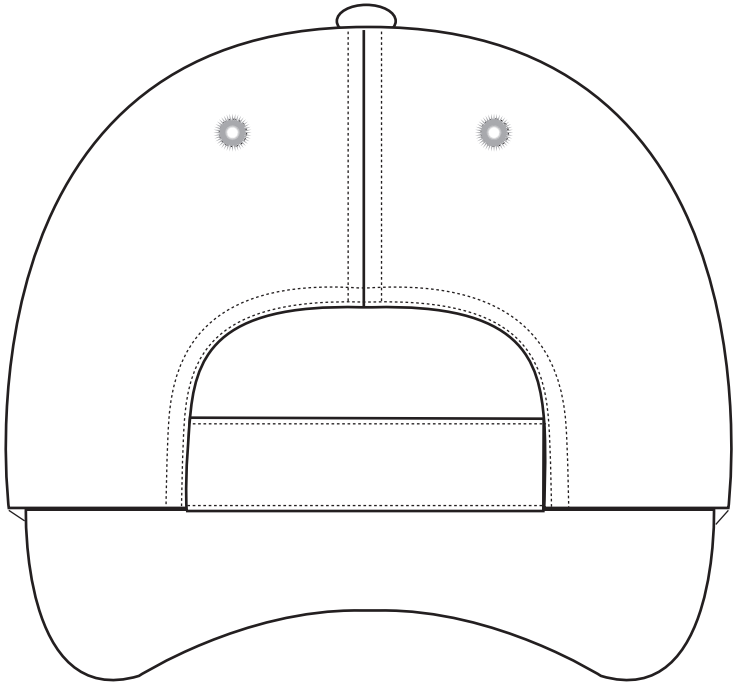

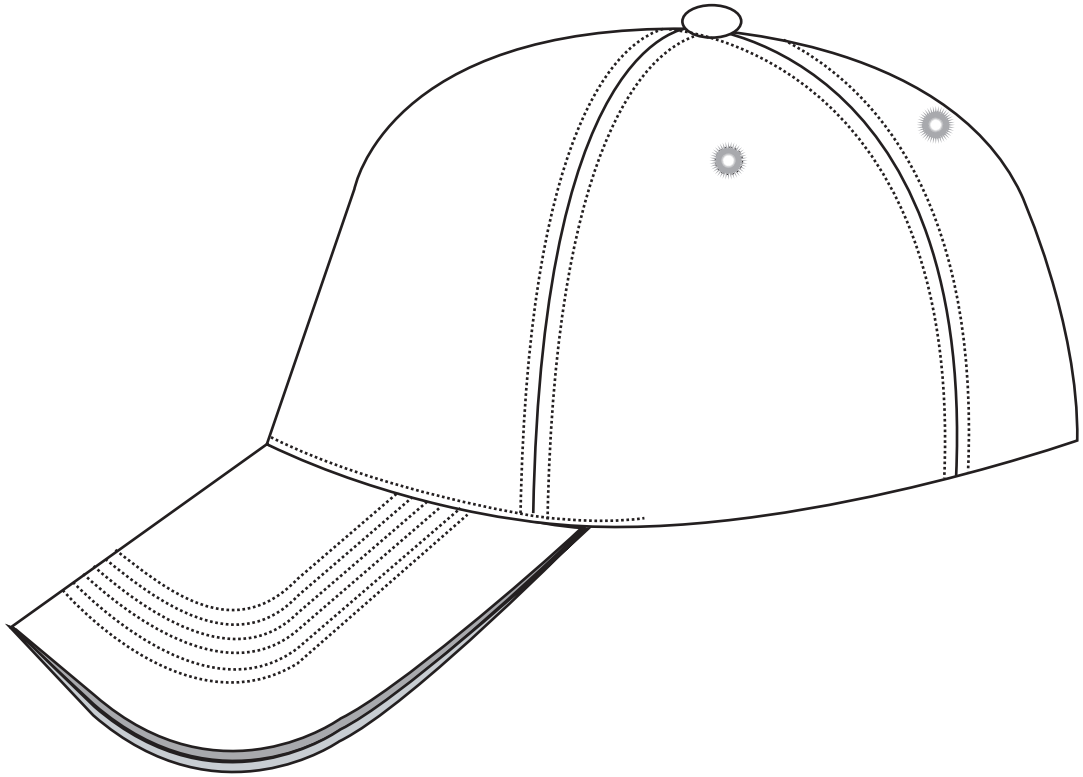

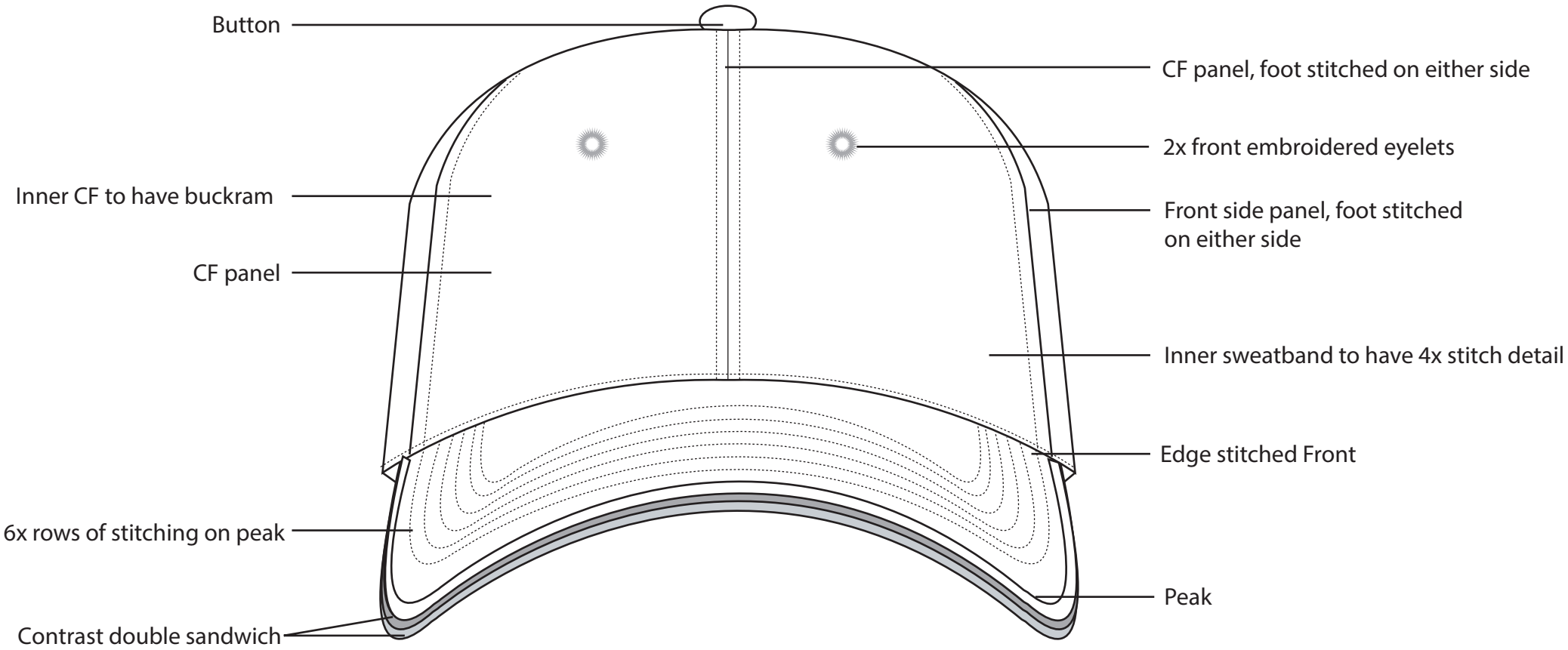
Button
CF panel, foot stitched on either side
2x front embroidered eyelets
Inner CF to have buckram
Front side panel, foot stitched on either side
CF panel
Inner sweatband to have 4x stitch detail
Edge stitched Front
6x rows of stitching on peak
Peak
Contrast double sandwich

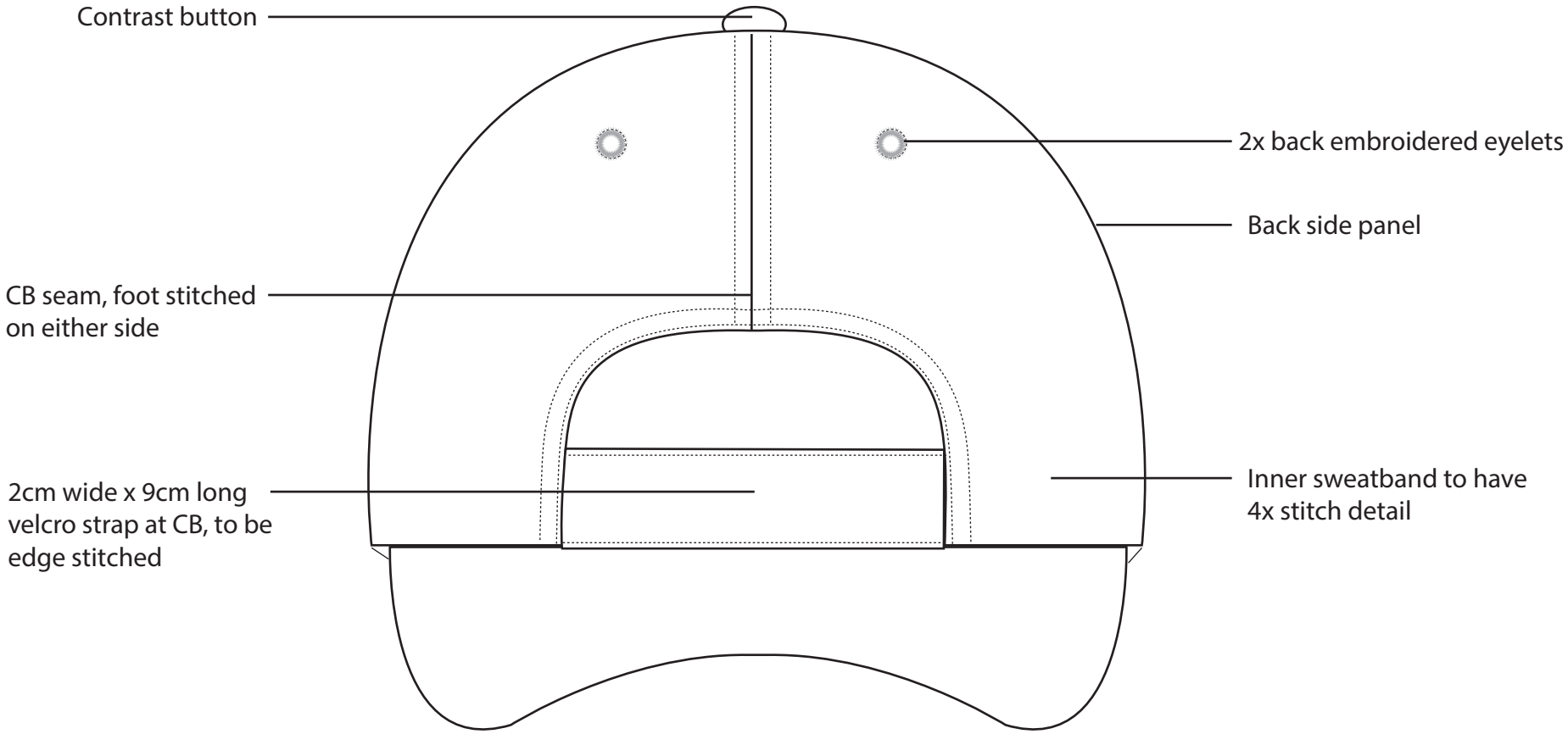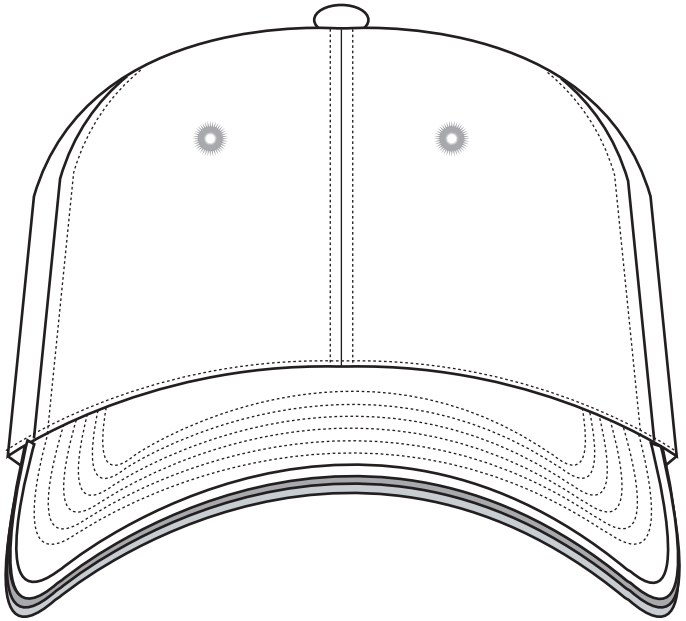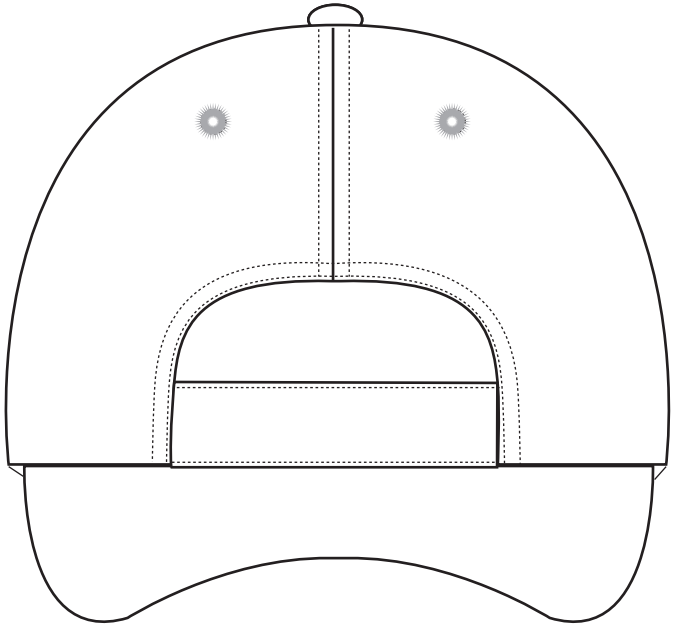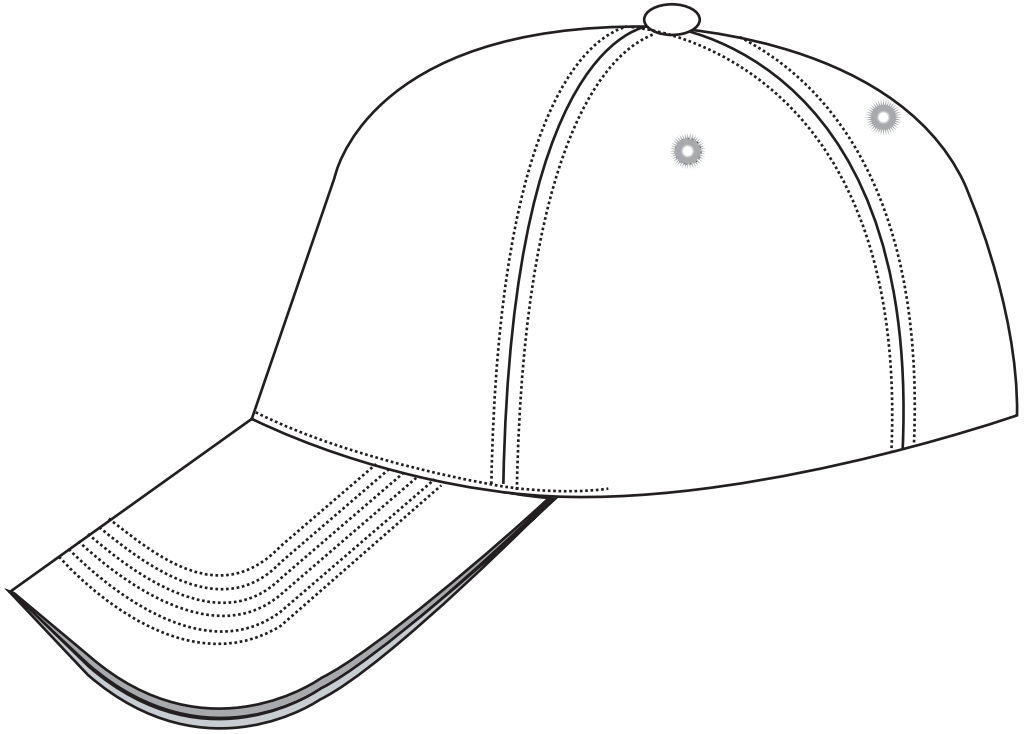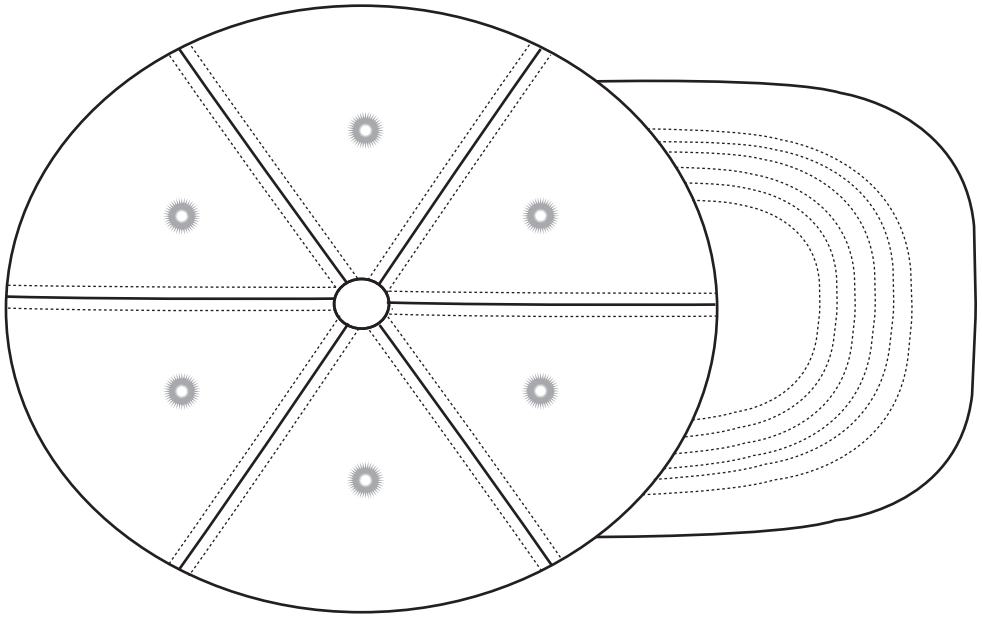
Contrast button
2x back embroidered eyelets
Back side panel
CB seam, foot stitched on either side
2cm wide x 9cm long velcro strap at CB, to be edge stitched
Inner sweatband to have 4x stitch detail